Item: **Oil Pump**

Tag – Nr.:

1) **Pump / Motor** **P-2358 A / M-2358 A**

2) **Pump / Motor** **P-2358 B / M-2358 B**

Content:

- Oil pump drawing
- Oil pump data sheet
- El. motor data sheet
- El. motor load and starting curves
- El. Motor IECEx certificate of conformity

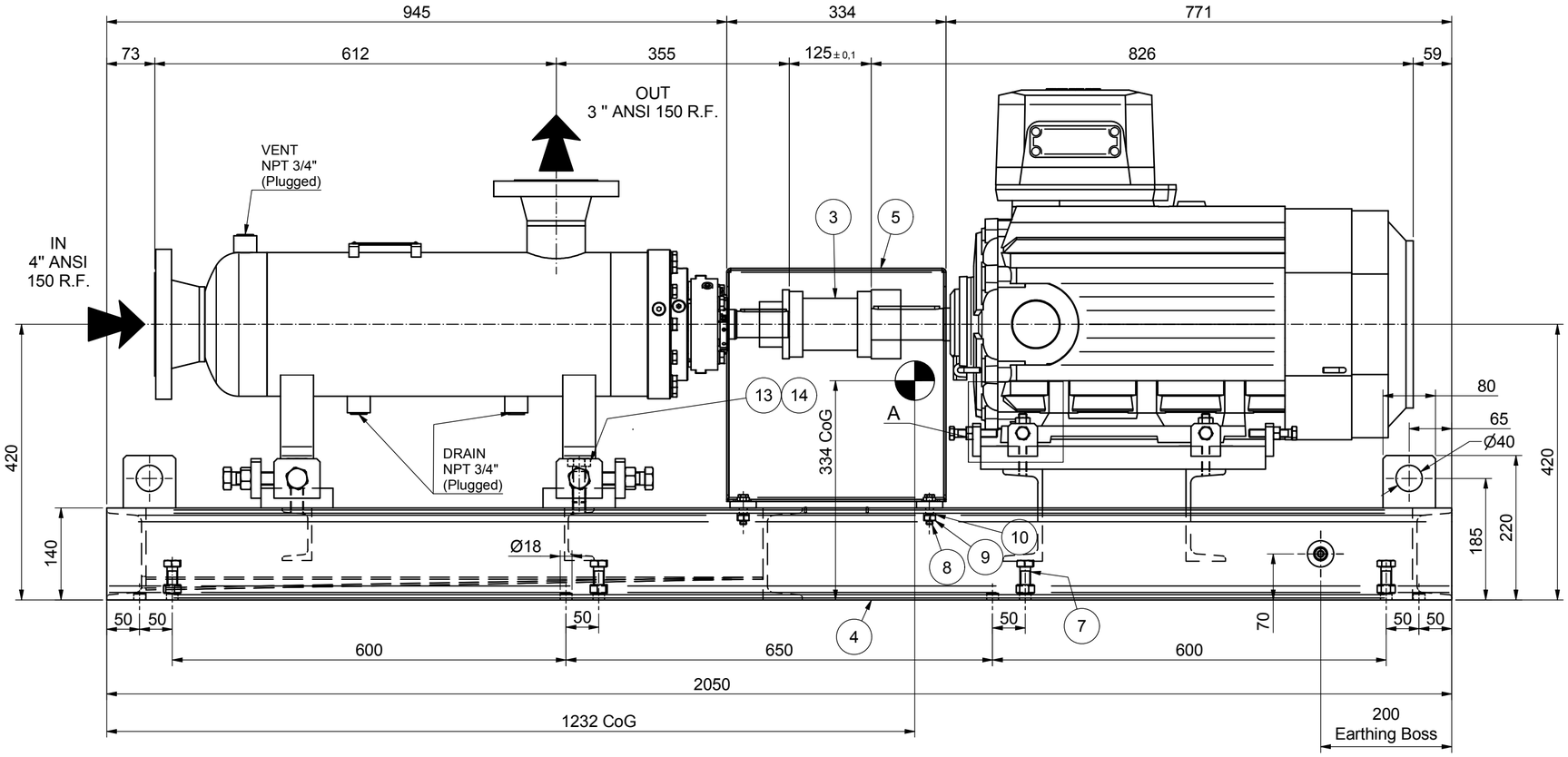

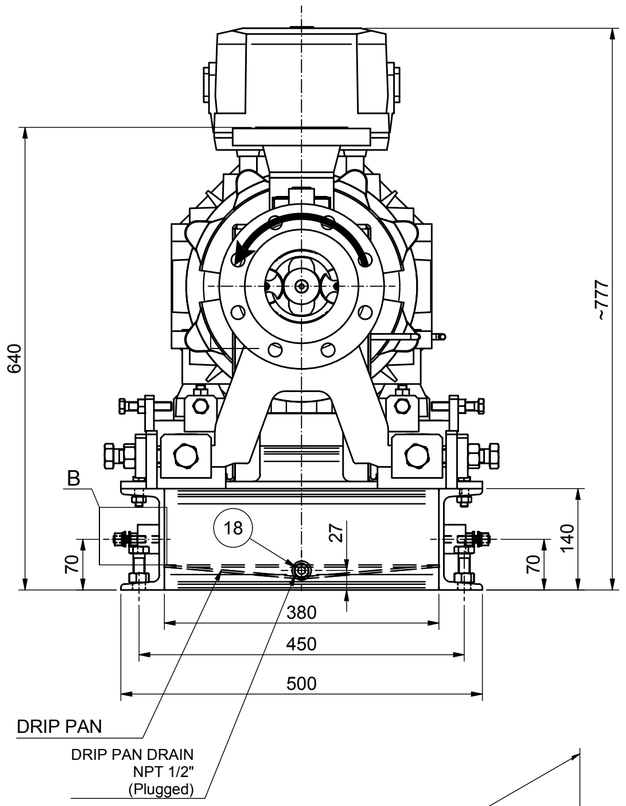

D (1:8)

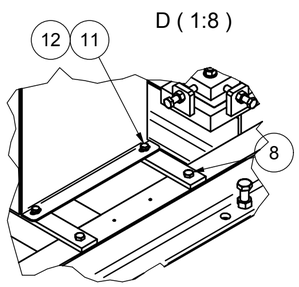

A (1 : 3)

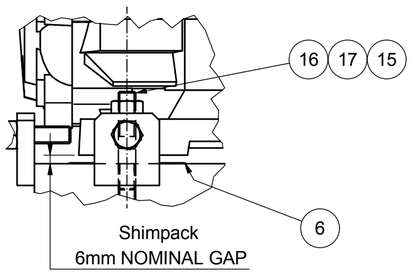

B (1 : 2)
EARTHING BOSS DETAIL

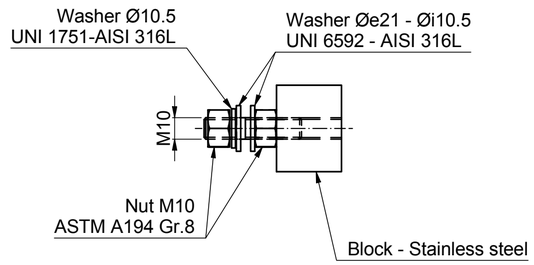

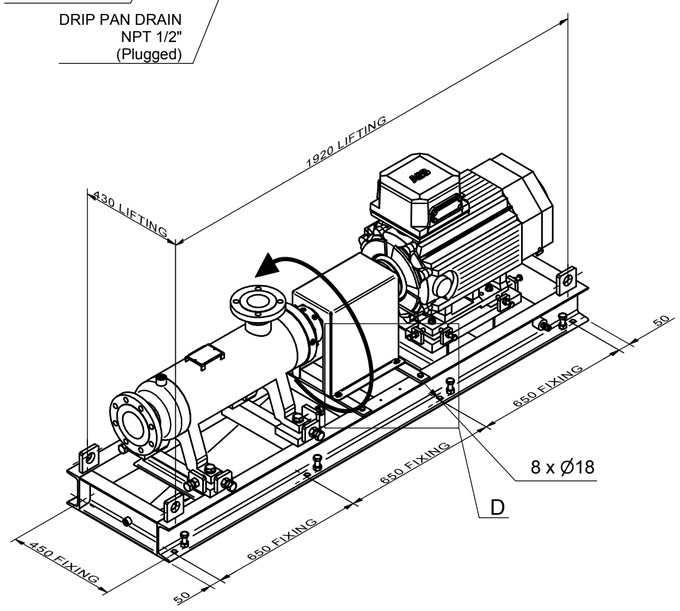

POS	QTY	PART N°	DESCRIPTION	STANDARD	MATERIAL	MASSA
1	1	3GZF500118-34_iges	M3KP180 MLA4 B3			285 kg
2	1	PCXA083 Comm 122-19	SEIM PUMP PCXA083			130 kg
3	1	TSKS0033 - DBSE125	Coupling			
4	1	5TEL083 Comm 122-19	Baseplate		S275JR UNI EN 10025	170 kg
5	1	5COP083 Comm 122-19	Coupling guard		Aluminium	3 kg
6	-	Shim for levelling-100-80-32	Shim pack for levellling		AISI 301	
7	8	ISO 4017 - M16 x 50	Hex head screw	ISO 4017 - M12x35	ASTM A320 Cl.2 B8M	
8	4	ISO 4017 - M10 x 35	Hex head screw	ISO 4017 - M10x35	ASTM A320 Cl.2 B8M	
9	4	UNI 5588 - M10	Hex nut	ISO 5588 - M10	ASTM A194 Gr. 8M	
10	4	ISO 8738 - 10	Washer	ISO 8738	ASTM A193 B8M	
11	4	ISO 4017 - M8 x 20	Hex head screw	ISO 4017 - M8x20	ASTM A320 Cl.2 B8M	
12	4	ISO 8738 - 8	Washer	ISO 8738	ASTM A193 B8M	
13	4	ISO 4017 - M20 x 55	Hex head screw		ASTM A320 Cl.2 B8M	
14	4	ISO 7089 - 20	Washer		ASTM A193 B8M	
15	4	ISO 7089 - 12	Washer		ASTM A193 B8M	
16	4	UNI 5909 - M12 x 70	Stud		ASTM A320 Cl.2 B8M	
17	4	UNI 5588 - M12	Hex nut		ASTM A194 8M	
18	1	ASME Tappo EI 1/2 NPT	Hex Socket Head Pipe Plug		ASTM A105	

CENTER OF GRAVITY

PUMP MAIN COMPONENTS MATERIALS:
- ROTORS ASTM A322 Gr.5120
- LINER ASTM A48 GR.35
- FLANGES ASTM A105
- CASING ASTM A105/A106 Gr. B

TOTAL WEIGHT APPROX. 600 kg

REV	DESCRIZIONE DESCRIPTION	DATA DATE	FIRMA SIGN	VISTO CHKD
3				
2				
1	According to client commets	13/03/2019	M.M.	M.M.

LE QUOTE SENZA INDICAZIONE DI TOLLERANZA SONO SOLO INDICATIVE / DIMENSIONS WITHOUT TOLERANCES ARE ONLY INDICATIVE

IL PRESENTE DISEGNO E' DI PROPRIETA' DELLA SEIM CON DIVIETO DI RIPRODURLO O RENDERLO NOTO SENZA AUTORIZZAZIONE

THIS DRAWING BELONGS TO SEIM. IT IS FORBIDDEN TO REPRODUCE IT OR MAKE IT KNOWN WITHOUT PERMISSION

SEIM
Cusago (Milano)-ITALY

DATA / DATE	08/03/19		SCALA / SCALE 1 : 6
DISEGNATO / DRAWN	M.M.	VISTO / CHECKED	M.M.
DENOMINAZIONE DISEGNO / DRAWING TYPE/NAME	LAY OUT		F.to A2
ASSIEME / ASSEMBLY	MPACXA083 Comm 122-19		
CODICE / CODE	N° DISEGNO / DRAWING No MPCXA083 VE Comm 122-19		REV 1

SEIM Srl Italy

20090 Cusago (MI) ITALY
via A.Volta, 17
tel. (+39) 02.90.39.21.1
fax (+39) 02.90.39.21.40

Datasheet Nr. **17.212** Rev **2** Date **6/2/2019**

Customer **DE PRETTO INDUSTRIE SRL**

Reference Person **Mr Igor Jursic**

Customer reference

Project **Shell Pohokur**

Seim Reference **19-0480-NS**

Item Number

Operating data

Pumps Series **PCXA**

Pump size **83**

Pump pitch **A**

Fluid and working condition		ISO VG 46	Normal condition	min, temperature	max power condition
Viscosity	v	cSt	7,1	73,2	237,7
Temperature	T	°C	100	30	10
Speed	n	rpm	1450	1450	1450
Suction Pressure	pa	bar g	0	0	0
Delivery Pressure	pm	bar g	4,5	4,5	11
Differential Pressure	dp	bar	4,5	4,5	11
Flow	Q	l/min	505,7	559,19	561,79
Absorbed Power	P	kW	6,02	7,19	15,31
Nominal Torque	C	Nm	39,86	47,63	101,37
Total Efficiency	nT	%	63	58,3	67,27
NPSHr		mH2O	2,52	3	3,64
Sound Pressure Level		dB(A)	66,18	66,18	66,96

SEIM Srl Italy

20090 Cusago (MI) ITALY
via A.Volta, 17
tel. (+39) 02.90.39.21.1
fax (+39) 02.90.39.21.40

Delivery flow vs. Differential Pressure

bar	Normal condition 100°C	min. temperature 30°C	max power condition 10°C
1,32	548,51	577,48	586,20
2,64	527,73	568,70	581,03
3,96	511,73	561,90	577,01
5,28	497,86	555,80	573,24
6,60	486,01	550,79	570,29
7,92	475,36	546,32	567,69
9,24	465,17	541,81	564,89
10,56	456,01	537,95	562,62
11,88	447,49	534,40	560,56

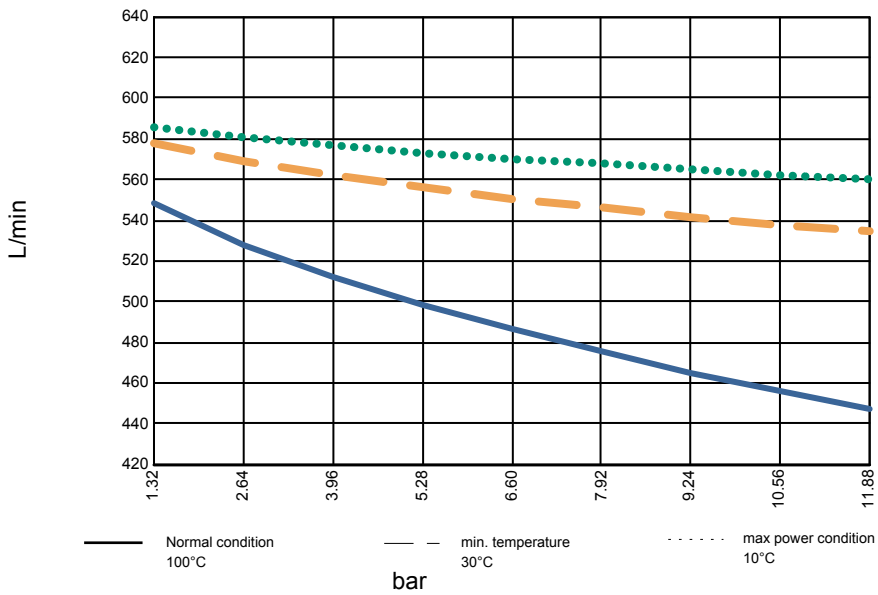

Absorbed power vs. Differential Pressure

bar	Normal condition 100°C	min. temperature 30°C	max power condition 10°C
0,00	1,31	2,49	3,80
1,32	2,69	3,88	5,18
2,64	4,08	5,27	6,57
3,96	5,47	6,65	7,96
5,28	6,85	8,04	9,34
6,60	8,24	9,43	10,73
7,92	9,63	10,81	12,12
9,24	11,01	12,20	13,50
10,56	12,40	13,59	14,89
11,88	13,79	14,97	16,28

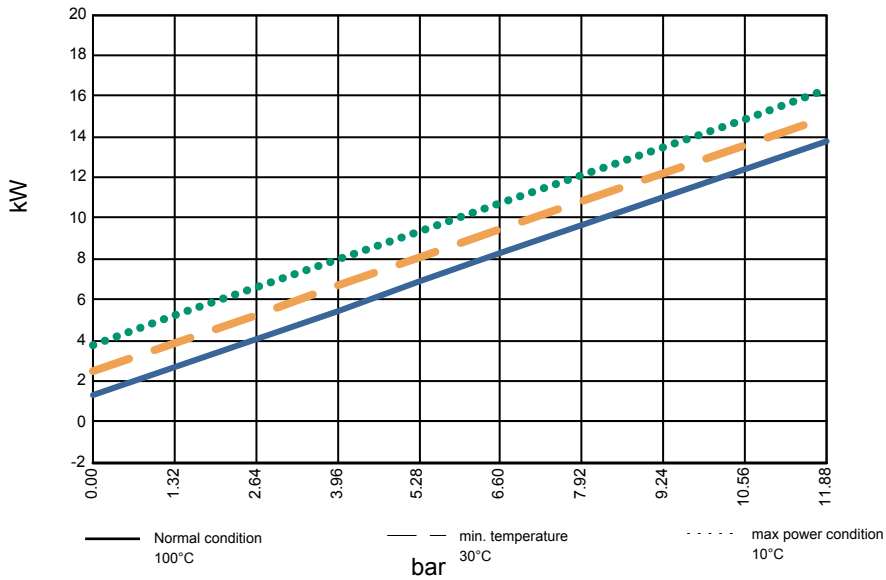

SEIM Srl Italy

20090 Cusago (MI) ITALY
via A.Volta, 17
tel. (+39) 02.90.39.21.1
fax (+39) 02.90.39.21.40

NPSH Required Vs Speed

rpm	Normal condition 100°C	min. temperature 30°C	max power condition 10°C
0,00	1,28	1,49	1,74
72,00	1,32	1,53	1,80
87,00	1,33	1,54	1,81
150,00	1,36	1,58	1,86
300,00	1,45	1,69	1,99
450,00	1,55	1,81	2,13
600,00	1,66	1,94	2,29
750,00	1,77	2,08	2,48
900,00	1,91	2,24	2,68
1050,00	2,05	2,42	2,90
1200,00	2,21	2,62	3,15
1350,00	2,39	2,84	3,43
1500,00	2,59	3,09	3,75

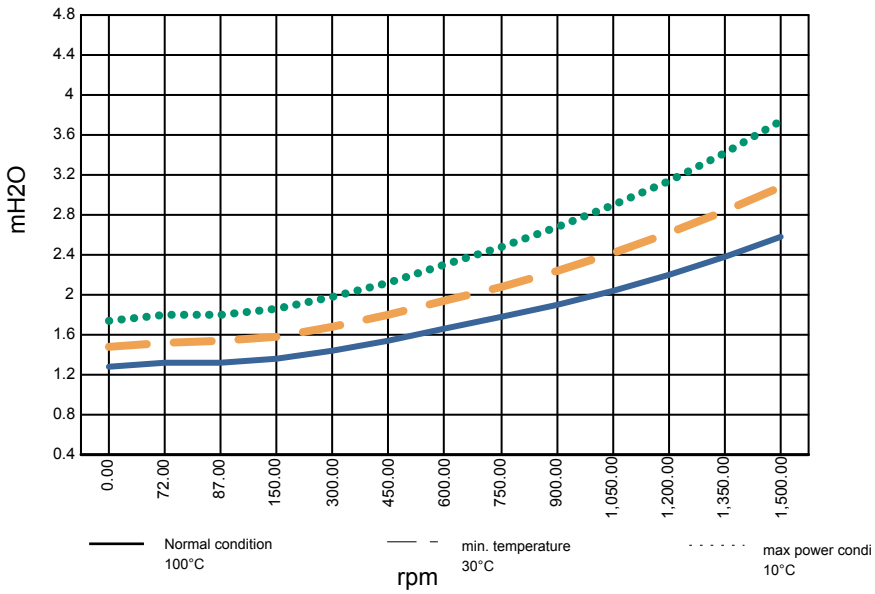

Nominal torque vs. Speed

rpm	Normal condition 100°C	min. temperature 30°C	max power condition 10°C
0,00	0,00	0,00	0,00
72,00	42,71	44,55	105,34
87,00	33,02	34,59	81,50
150,00	33,66	35,81	83,38
300,00	34,81	38,01	86,72
450,00	35,73	39,76	89,39
600,00	36,52	41,27	91,69
750,00	37,23	42,62	93,75
900,00	37,89	43,87	95,65
1050,00	38,49	45,03	97,41
1200,00	39,06	46,11	99,07
1350,00	39,60	47,14	100,64
1500,00	40,12	48,13	102,14

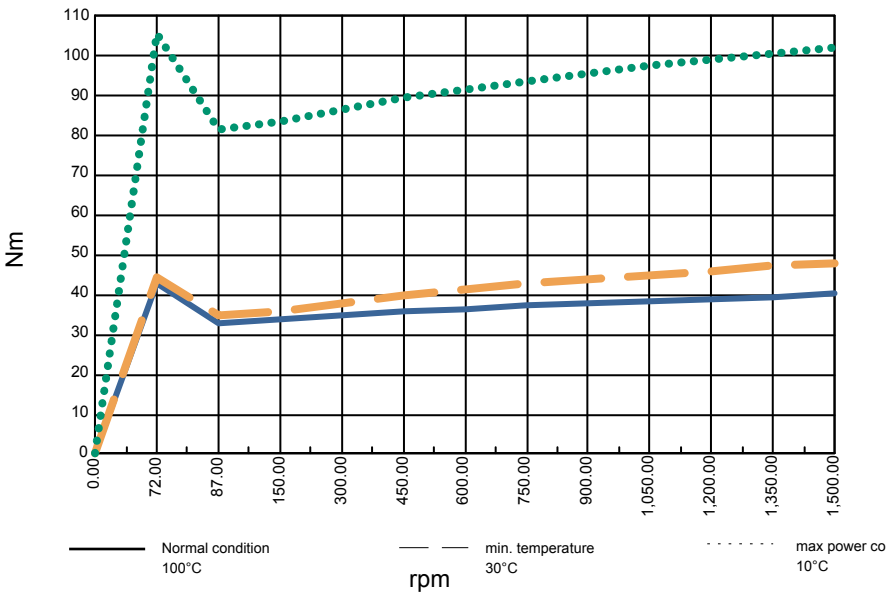

ABB Motors and Generators	Technical Data Sheet - DOL			
	Project		Location	
Department/Author	Customer name		Customer ref.	Item name
Our ref.	Rev/Changed by **A**	Date of issue **31/01/2019**	Saving ident **motor data sheet.xls**	Pages **1(3)**

No.	Definition	Data	Unit	Remarks	
1	Product	***TEFC, 3-phase, squirrel cage induction motor***			
2	Product code	***3GKP 182 410-ADL***		Calc. ref.	**3GZF021018-259**
3	Type/Frame	***M3KP 180MLA 4***			
4	Mounting	***IM1001, B3(foot)***			
5	Rated output P_N	***18,5***	kW		
6	Service factor	***1***			
7	Type of duty	***S1(IEC) 100%***			
8	Rated voltage U_N	***400***	VD	± 5 % (IEC 60034-1)	
9	Rated frequency f_N	***50***	Hz	± 2 % (IEC 60034-1)	
10	Rated speed n_N	***1481***	r/min		
11	Rated current I_N	***34,9***	A		
12	No-load current	***13,3***	A		
13	Starting current I_s/I_N	***7,2***		Meet IEC 60034-12, N	
14	Nominal torque T_N	***119***	Nm		
15	Locked rotor torque T_S/T_N	***2,8***			
16	Maximum torque T_{max}/T_N	***3***			
17	Minimum torque T_{min}/T_N	***2,0***			
18	Speed at minimum torque	***255***	r/min		
	Load characteristics (IEC 60034-2-1:2014)	Load %	Current A	Efficiency %	Power factor
19	PLL determined from residual loss	*100*	**34,9**	**92,6 / IE3**	**0,83**
20		*75*	**26,9**	**93,2**	**0,8**
21		*50*	**20,8**	**92,9**	**0,69**
22		*Start*	**251**		**0,4**
23	Maximum starting time from hot	***15***	s		
24	Maximum starting time from cold	***27***	s		
25	Insulation class / Temperature class	***F / B***			
26	Ambient temperature	***40***	°C		
27	Altitude	***1000***	m.a.s.l.		
28	Enclosure	***IP65***			
29	Cooling system	***IC411 self ventilated***			
30	Bearing DE/NDE	***6310/C3 - 6310/C3***			
31	Type of Grease	***Grease / Regreseable via grease nipples***			
32	Sound pressure level (LP dB(A) 1m)	***60***	dB(A)	*at load +3dB(A) tolerance*	
33	Moment of inertia J = ¼ GD2	***0,219***	kg-m2		
34	Balancing	***Half key***			
35	Vibration class	***Grade A***			
36	Position of terminal box	***Top***			
37	Terminal box entries; no, dimens.	***2 x M40 x 1,5 + 1 x M20 x 1,5***		*ISO metric*	
38	Number of power terminals	***6***			
39	Direction of rotation	***CW or CCW***			
40	Weight of rotor	***58***	kg		
41	Total weight of motor	***285***	kg		
42	Dimension drawing no.				
43					
44					
45					
Ex-motors					
46	Type of protection	***Ex de IIB T4 Gb***			
47	EC Type Examination No	***LCIE 11 ATEX 3088 X / IECEx LCI 09.0009X***			
48					
Option	Variant Codes / Definition				
49					
50					
51					
52					

Remarks:

All data subject to tolerances in accordance with IEC

ABB Motors and Generators	Load Curves		
	Project	Location	
Department/Author	Customer name	Customer ref.	Item name
Our ref.	Rev/Changed by Date of issue **A** **31/01/2019**	Saving ident **motor data sheet.xls**	Pages **2(3)**

Product	**TEFC, 3-phase, squirrel cage induction motor**		
Type/Frame	**M3KP 180MLA 4**	Calc. ref.	**3GZF021018-259**
Product code	**3GKP 182 410-ADL**		
Rated output P_N	**18,5** kW		
Type of duty	**S1(IEC) 100%**		

Voltage (V)	**400**	Current I_N (A)	**34,9**	Power factor at P_N	**0,83**
Frequency (Hz)	**50**	Speed (r/min)	**1481**	Efficiency (%) at P_N	**92,6**

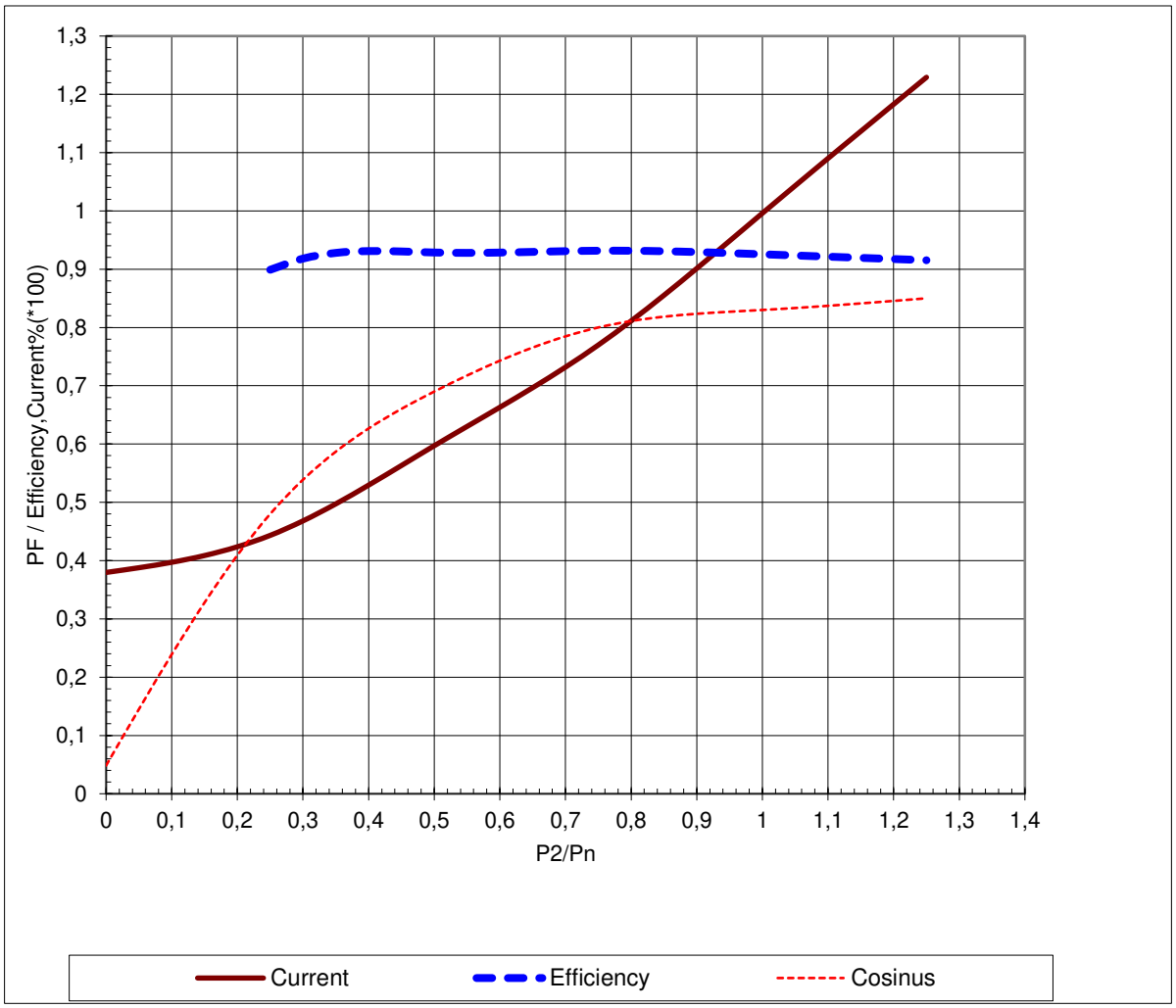

All data subject to tolerances in accordance with IEC

ABB Motors and Generators	Starting Curves		
	Project	Location	
Department/Author	Customer name	Customer ref.	Item name
Our ref.	Rev/Changed b Date of issue **A** **31/01/2019**	Saving ident **motor data sheet.xls**	Pages **3(3)**

Type of product	**TEFC, 3-phase, squirrel cage induction motor**		
Type/Frame	**M3KP 180MLA 4**	Calc. ref.	**3GZF021018-259**
Product code	**3GKP 182 410-ADL**	Frequency (Hz)	**50**
Rated output P_N	**18,5** kW	Rated current I_N	**34,9** A
Type of duty	**S1(IEC) 100%**		

J_{motor} (kgm2)	**0,22**	Voltage (V) 100%	***400***	Voltage (V)	***320V(80%)***
J_{load} (kgm2)	**0,008**	T_{start}/T_N	***2,8***	T_{start}/T_N	***1,7***
Speed (r/min)	**1481**	Starting time (s)	***0,2***	Starting time (s)	***0,3***
T_N (Nm)	**119**	Speed (r/min)	***1490***	Speed (r/min)	***1485***
T_{load} (Nm)	**57**	I_s/I_n	***7,2***	I_s/I_n	***5,3***
Nbr. of Consecutive Starts	**Hot: 2 Cold: 3**	T_{max}/T_n	***3***	T_{max}/T_n	***1,9***

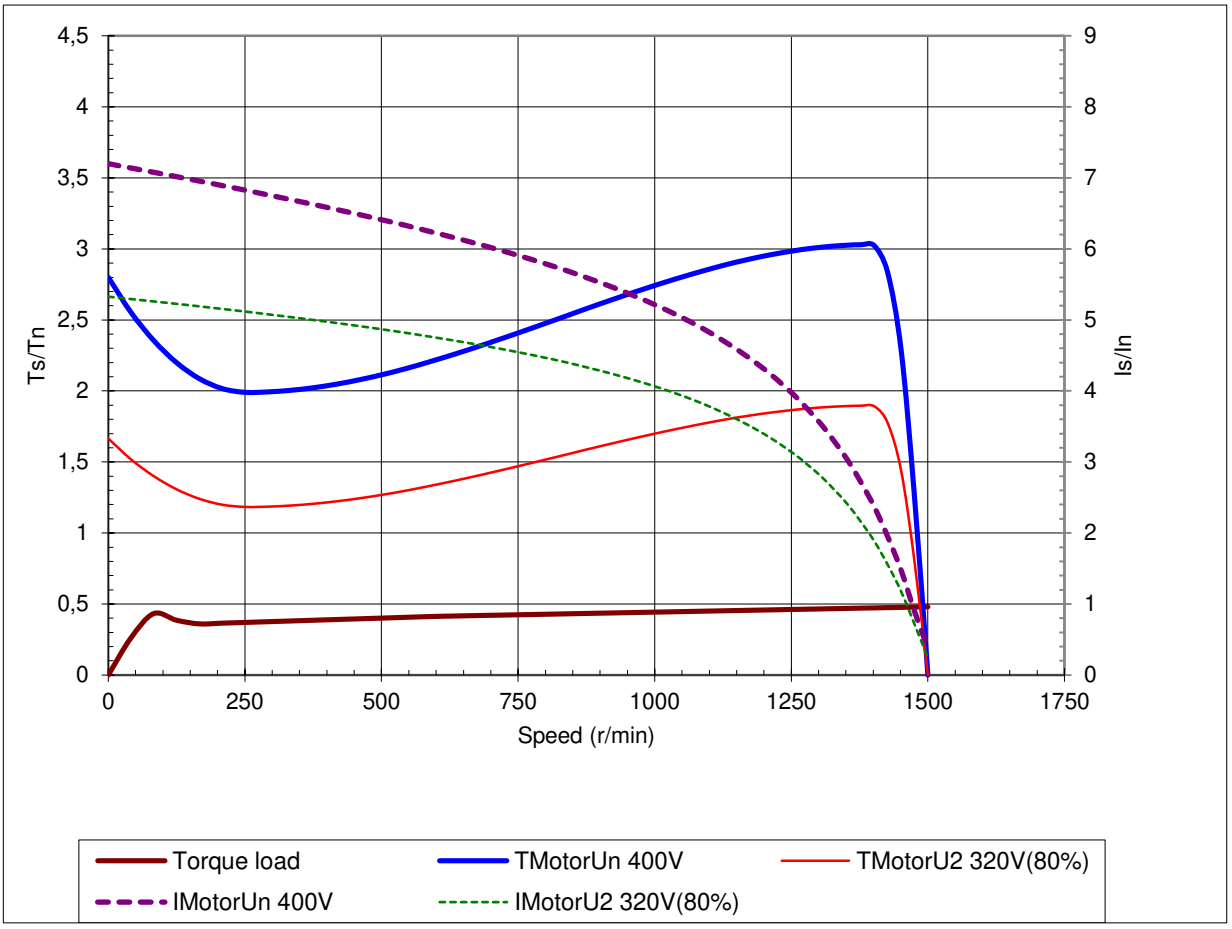

All data subject to tolerances in accordance with IEC

IECEx Certificate of Conformity

INTERNATIONAL ELECTROTECHNICAL COMMISSION
IEC Certification Scheme for Explosive Atmospheres

for rules and details of the IECEx Scheme visit www.iecex.com

Certificate No.:	IECEx LCI 09.0009X	issue No.:4
Status:	**Current**	
Date of Issue:	**2015-11-27**	Page 1 of 5

Certificate history:
Issue No. 4 (2015-11-27)
Issue No. 3 (2015-9-1)
Issue No. 2 (2011-11-21)
Issue No. 1 (2009-3-19)
Issue No. 0 (2009-2-23)

Applicant: **ABB Oy Motors and Generators**
P.O. Box 633
Strombergin Puistotie 5A
FIN-65101 VAASA
Finland

Electrical Apparatus: **Asynchronous motor - M3J_ 180... and M3K_ 180... (Generation H)**
Optional accessory:

Type of Protection: **Ex d, Ex de , Ex tb**

Marking:
Ex d I Mb
Ex d or de IIB or IIC T6...T3 (*) Gb
Ex tb IIIA or IIIB or IIIC T...°C (*) Db
IECEx LCI 09.0009X
(*) = depending on motor type and model as specified in manufacturer specifications.
For complete marking see Annex 01.

Approved for issue on behalf of the IECEx Certification Body: Michel Equi

Position: Certification Officer

Signature: (for printed version)

Date: 2015/11/27

1. This certificate and schedule may only be reproduced in full.
2. This certificate is not transferable and remains the property of the issuing body.
3. The Status and authenticity of this certificate may be verified by visiting the Official IECEx Website.

Certificate issued by:
Laboratoire Central des Industries Electriques (LCIE)
33 Avenue du General Leclerc
FR-92260 Fontenay-aux-Roses
France

Documents relative to LCIE certification activites (Certificates, QARs, ExTRs) can be registered under the references "LCI" or "LCIE".

L C I E

IECEx Certificate of Conformity

Certificate No.: IECEx LCI 09.0009X

Date of Issue: **2015-11-27**

Issue No.: **4**

Manufacturer:

ABB Oy Motors and Generators
P.O. Box 633
Strombergin Puistotie 5A
FIN - 65101 VAASA
Finland

Additional Manufacturing location (s):

ABB Sp.zo.o
Ul. Placydowska
95-070 Aleksandrow Lodzki
Poland

ABB Logistics Center Europe GmbH
Braukerweg 132
58706 Menden
Germany

This certificate is issued as verification that a sample(s), representative of production, was assessed and tested and found to comply with the IEC Standard list below and that the manufacturer's quality system, relating to the Ex products covered by this certificate, was assessed and found to comply with the IECEx Quality system requirements. This certificate is granted subject to the conditions as set out in IECEx Scheme Rules, IECEx 02 and Operational Documents as amended.

STANDARDS:
The electrical apparatus and any acceptable variations to it specified in the schedule of this certificate and the identified documents, was found to comply with the following standards:

IEC 60079-0 : 2011 Edition: 6.0	Explosive atmospheres - Part 0: General requirements
IEC 60079-1 : 2007-04 Edition: 6	Explosive atmospheres - Part 1: Equipment protection by flameproof enclosures "d"
IEC 60079-31 : 2008 Edition: 1	Explosive atmospheres – Part 31: Equipment dust ignition protection by enclosure 't'
IEC 60079-7 : 2006-07 Edition: 4	Explosive atmospheres - Part 7: Equipment protection by increased safety "e"

*This Certificate **does not** indicate compliance with electrical safety and performance requirements other than those expressly included in the Standards listed above.*

TEST & ASSESSMENT REPORTS:
A sample(s) of the equipment listed has successfully met the examination and test requirements as recorded in

Test Report:
FR/LCI/ExTR09.0008/00 FR/LCI/ExTR09.0008/01 FR/LCIE/ExTR15.0083/00
FR/LCIE/ExTR15.0144/00

Quality Assessment Report:

FR/LCI/QAR08.0003/05

IECEx Certificate of Conformity

Certificate No.: IECEx LCI 09.0009X

Date of Issue: **2015-11-27** Issue No.: **4**

Schedule

EQUIPMENT:
Equipment and systems covered by this certificate are as follows:

The equipment is an asynchronous motor with flameproof frame and either flameproof terminal box or increased safety terminal box. Stator frame and terminal box are also protected by enclosure "tb".

Motors of group I:
M3JM... for Ex d motors intended for use in mines susceptible for firedamp.

Motors of groups II and III:
M3JP... for Ex d / Ex t motors.
M3KP... for Ex de / Ex t motors.
M3JC... for Ex d / Ex t high speed motors.
M3KC... for Ex de / Ex t high speed motors.
M3KG... for Ex de / Ex t motors used as generators.
M3JG... for Ex d / Ex t motors used as generators.

Technical specifications are given in Annex 01.

CONDITIONS OF CERTIFICATION: YES as shown below:

Indication of temperature of conductor at entry point and branching point when the temperature under rated conditions is higher than 70°C at the entry point or 80 °C at the branching point.

Operating ambient temperature range:
-20°C ≤ Ta ≤ +50°C for motors of group I
-55°C ≤ Ta ≤ +80°C for IIB gas group and group III
-55°C ≤ Ta ≤ +70°C for IIC gas group

Some flameproof joints dimensions are lower than maximum defined in table 1 and table 2 of IEC 60079-1. These manufacturing gaps are defined in the manufacturer dismantling and assembly guide N°3GZF500716-238.

In case of use with a frequency converter, the motors may be equipped with internal temperature protection to ensure the insulation class. The surface temperature class may also be protected by embedded thermal sensors. The motors must be supplied according to the manufacturer's specifications stated on the 2nd name plate to ensure the temperature class. The relevant instructions for use on variable frequency stated by the manufacturer have to be respected.

Ambient temperature between -20°C to -55°C is allowed without adding heating elements or other heating system.

The instructions of the manufacturer to minimize the risk from electrostatic discharge must be strictly respected.

IECEx Certificate of Conformity

Certificate No.: IECEx LCI 09.0009X

Date of Issue: **2015-11-27**

Issue No.: **4**

EQUIPMENT(continued):

Routine tests:
Each single increased safety terminal box shall be submitted to the dielectric strength test in accordance with the clause 7 of IEC 60079-7.

Overpressure tests:
According to the schedule hereunder, a static pressure routine test shall be carried out for at least 10 seconds without exceeding 1 minute :

Up to 4500 rpm						
Motor part :	Tam ≥ -20°C		Tamb ≥ -40°C		Tamb ≥ -55°C	
	Group IIB	Group IIC	Group IIB	Group IIC	Group IIB	Group IIC
Frame	exempted	exempted	exempted	exempted	exempted	exempted
Endshield	exempted	exempted	exempted	exempted	exempted	exempted
Intermediate plate	exempted	exempted	exempted	exempted	exempted	exempted
Terminal box - frame	exempted	exempted	exempted	exempted	exempted	exempted
terminal box - cover	exempted	exempted	exempted	exempted	exempted	exempted

Up to 10000 rpm						
Motor part :	Tam ≥ -20°C		Tamb ≥ -40°C		Tamb ≥ -55°C	
	Group IIB	Group IIC	Group IIB	Group IIC	Group IIB	Group IIC
Frame	exempted	exempted	exempted	exempted	exempted	29.5 bar
Endshield	exempted	exempted	exempted	exempted	exempted	exempted
Intermediate plate	exempted	exempted	exempted	exempted	exempted	exempted
Terminal box - frame	exempted	exempted	exempted	exempted	exempted	exempted
terminal box - cover	exempted	exempted	exempted	exempted	exempted	exempted

IECEx Certificate of Conformity

Certificate No.: IECEx LCI 09.0009X

Date of Issue: **2015-11-27**

Issue No.: **4**

DETAILS OF CERTIFICATE CHANGES (for issues 1 and above):

Issue 1:
No ExTR issued. Minor corrections done in the certificate concerning the marking.

Issue 2:
- Normative update according to standards IEC 60079-0:2007 Ed. 5.0 and IEC 60079-31:2008 Ed. 1.
- Addition of the dust protection by enclosure Ex t.
- Addition of new motor models: M3JC 180 Ex d high speed motor, M3KC 180 Ex de high speed motors.
- Addition of use of frequency converters with embedded thermal sensors to ensure the temperature class.
- Addition of a new material for bushing.
- Addition of 2 new isolating materials for the terminal board.
- Increase of the maximal ambient temperature:

-55°C ≤ Ta ≤ +80°C for IIB gas group
-55°C ≤ Ta ≤ +70°C for IIC gas group

Issue 3:
- Normative update according to IEC 60079-0:2011 Ed. 6.0 standard.
- Addition of efficiency class IE3 motor range and associated electrical characteristics.
- Addition of an improved connection method for flying leads.
- Addition of a new material for terminal bloards.
- Addition of generator application and associated designations M3JG and M3KG.

M3KG : motor Ex de / Ex t used as generator
M3JG : motor Ex d / Ex t used as generator

- Addition of new manufacturing locations.

Issue 4:
- Adding of motors range type M3JM 180... intended for use in mines susceptible for firedamp.

Annex: Annex 01 to Certificate IECEx LCI 09.0009X issue 04.pdf

1. Technical specifications:

Electrical parameters are the followings:
- Nominal rated voltages (DOL "Direct On Line" application): Three-phase 190 V up to 800 V (up to 1250 V for motors of group I).
Tolerances according to :
  - EN/IEC 60034-1 for motors stamped in multi-voltages use (e.g. : 380 V – 400 V - 415 V)
  - IEC 60038 for motor stamped at single voltage use (e.g. : 400 V / 690 V).
- Maximum nominal voltage with converter (VSD "Variable Speed Drive" application): 690 Vac.
- Frequency : 50 Hz or 60 Hz or variable frequency
- Duty: S1 or intermittent duty S2 to S10.

Electrical and mechanical variations are defined in the documents N° 3GZF 500918-40 Rev. D and N° 3GZF500930-790 Rev. A.:
- Motors designed with same nominal flux within a tolerance of +/- 3%, and same frequency
- Output power other than listed
- Pole number between 2 and 20
- Power supply cable permanently connected (flying leads) or not permanently connected
- Closed N-end without fan is allowed (IC410)
- Thermal sensor for bearing certified Category 2
- Motors with designations M3KG and M3JG are used as asynchronous generators.

Ingress protection IP5X, IP54, IP6X or IP64 according to EN/IEC 60034-5.

2. Marking

ABB Oy Motors and Generators
Address: ...

Type: M3J_ 180... or M3K_ 180... Serial number: ... Ex d or de IIB or IIC T6...T3 (*) Gb Ex tb IIIA or IIIB or IIIC T...°C (*) Db	OR	Type: M3JM 180... Serial number: ... Ex d I Mb

IECEx LCI 09.0009X
IP5X, IP54, IP6X or IP64 (*)
(*) = depending on motor type and model as specified in manufacturer specifications.

- Ambient temperatures if different from -20°C/+40°C
- In case the temperature under rated conditions is higher than 70°C at the entry point or 80°C at the branching point of the conductors, the motor shall bear the warning:
WARNING - SELECTION OF CABLES AND CABLE GLANDS - SEE MANUAL
- The acronym "e" or "Ex e" on the terminal box of M3KP, M3KC and M3KG motors.
- For the motors driven by converters a second name plate will be fixed on the motors mentioning the voltage, current and/or load conditions in function of the frequency range, as well as the relevant converter characteristics.
- Thermal sensors could be connected to intrinsic safety circuits "ia" or "ib". Depending on the kind of circuit, symbol related to the protection mode will be added to the marking.
- For IIC apparatus when the paint thickness is superior to the maximal values specified in table 8 of IEC 60079-0, and for dust application, the following warning is added :
"WARNING: POTENTIAL ELECTROSTATIC CHARGING HAZARD – SEE INSTRUCTIONS".

For motors with Ex e terminals boxes : "WARNING – DO NOT OPEN WHILE ENERGIZED"
For motors with Ex d terminals boxes "WARNING – AFTER DE-ENERGIZING DELAY 60 MIN. BEFORE OPENING"
For dust application : "WARNING – DO NOT OPEN WHEN AN EXPLOSIVE DUST ATMOSPHERE MAY BE PRESENT"

The equipment shall also bear the usual marking required by the manufacturing standards applying to such equipment, such as electrical characteristics (Un...V, In...A, Pn...kW, F...Hz, rpm, Cos φ, efficiency class IE2 or IE3...).
The "Generation H" (generation code: H) doesn't appear in the type designation The letter associated to generation code is included in the product code written on the nameplate.

This Annex is valid only in combination with certificate mentioned above and may only be reproduced in its entirety and without any change.
CERT-ATEX-FORM 14 Rev. 00